Year 2 - Finding Missing Numbers (+ and –) — Lesson Guide

Step 1

☐ – 15 = 12

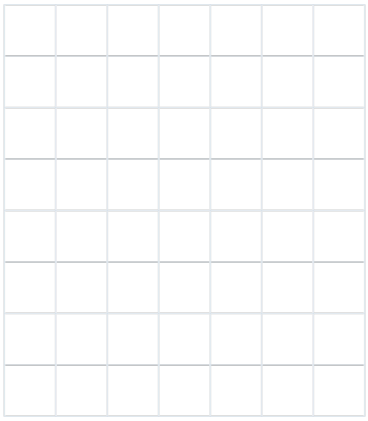

The minus sign tells us to take away. When we take something away, the number gets smaller. We circle the minus sign.

Step 2

☐ – 15 = 12

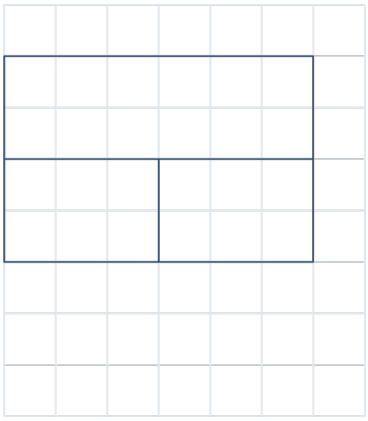

Remember: The box asks for a missing number. Put it back in the same place to check.

This is a missing number problem. We know what the calculation equals. The box asks which number we started with. A bar model helps us see the whole and its parts. We draw the whole on top and the two parts below it.

Step 3

☐ – 15 = 12

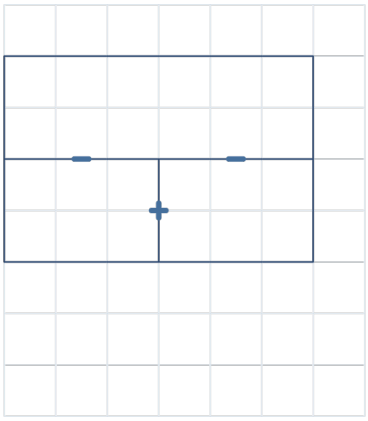

Next, we draw bold minus signs between the whole and its parts, and a bold plus sign between the two parts. This shows us that the two parts add to make the whole and, to find a part, we subtract the other part from the whole.

Step 4

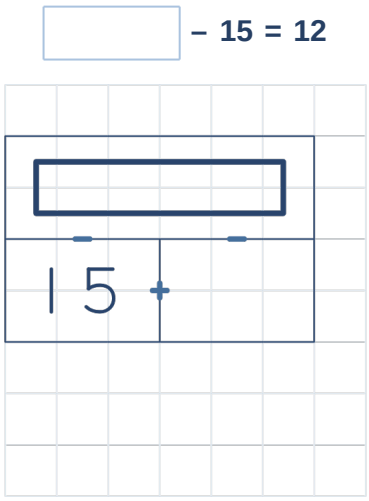

Next, we use our bar model to show something minus 15. The number we start with is the whole. The number we take away is one part. We draw a small box in the whole for the missing number. We write 15 in the left part.

Step 5

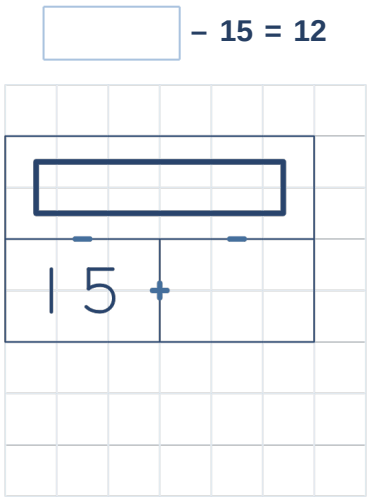

Check the two entries before filling the last space. Read the question up to the equals sign as something take away 15. In the bar model, the blank in the whole bar and 15 in the left part should read as something take away 15. If the entries match, fill the last space. If they differ, correct the model first.

Step 6

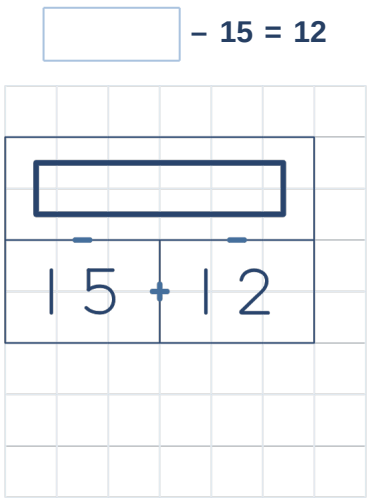

Now the calculation is in the correct place, we can look at the amount left, 12. We write 12 in the other part.

Step 7

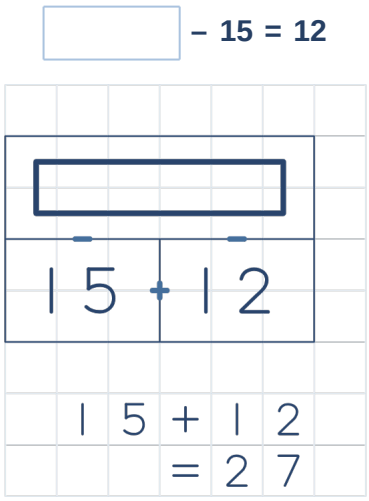

We add the two parts to find the whole. I can partition 12 into 10 and 2. I am going to add these parts mentally, starting with the greatest place value. 15 + 12 = 27.

Step 8

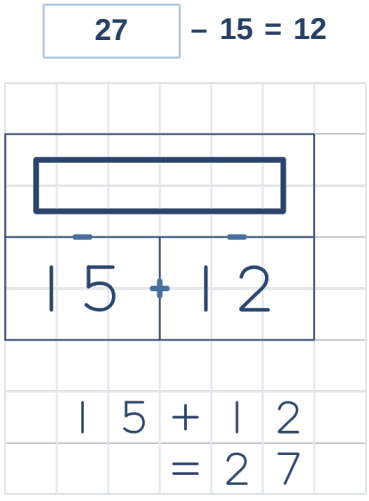

Now, we put 27 into the blank in the original question. Make sure you copy the answer correctly.

Step 9

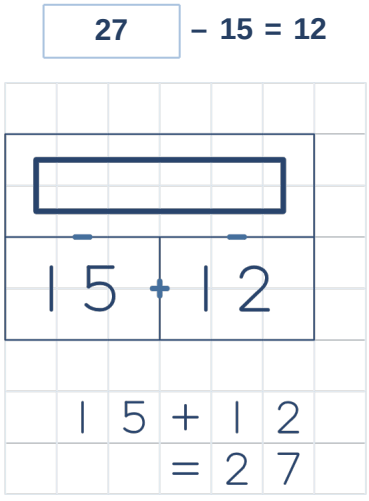

Put 27 in the blank and use the operation in the question. Take away 10 to get 17. Then take away 5 to get 12. The result matches 12 on the right. If you get a different number, check that you used the operation in the question. Then work it out again.